NOTE: BONNET AND CAPS TO BE FACTORY PAINTED WHITE **NO ON-SITE PAINTING (PUBLIC FH)**

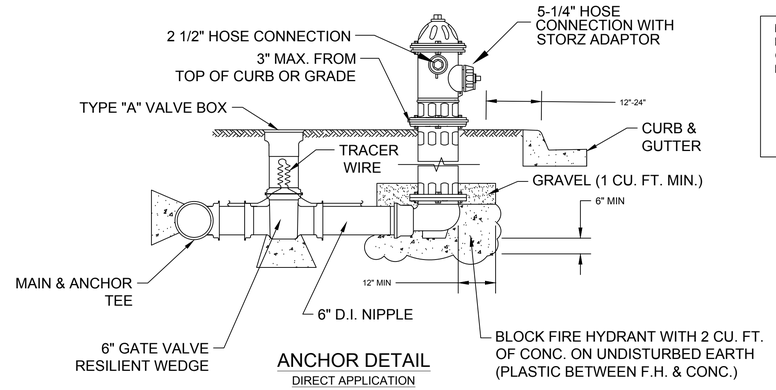

ANCHOR DETAIL
DIRECT APPLICATION

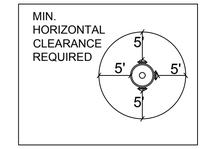

APPROVED PAINTS AND COLOR CODE

FIRE HYDRANT BONNET	SSPC PAINT NO. 21 (WHITE)
FIRE HYDRANT CAPS	SAME AS BONNET COLOR
FIRE HYDRANT BARREL	SSPC PAINT NO. 25 (RED)

CONSTRUCTION NOTES:

1. APPOVED MANUFACTURERS: MUELLER, KENNEDY, CLOW & EAST JORDAN. CONTACT PUBLIC WORKS FOR DISTRIBUTORS.
2. PUMPER NOZZLE TO BE FACING THE TRAVELED WAY, PERPENDICULAR TO THE ROAD AND 1' MINIMUM FROM FACE OF CURB.
3. ALL FIRE HYDRANTS ARE TO BE EQUIPPED WITH A 5" **INTEGRAL** STORZ QUICK CONNECT ON THE STEAMER OUTLET.
4. DO NOT CUT TRACER WIRE IN TEST BOX OR VALVE BOX.
5. POLYETHYLENE WRAP BETWEEN ALL CONCRETE AND MECHANICAL BENDS. (SPEC. 02528)
6. **ANY TIE-IN** SHALL BE COORDINATED BY THE CONTRACTOR WITH THE PUBLIC WORKS DEPT.
7. NO OBSTRUCTIONS WILL BE PERMITTED WITHIN 5 FT. IN ALL DIRECTIONS OF FIRE HYDRANT (PER PW DESIGN GUIDE & TECHNICAL SPECIFICATIONS).
8. RELOCATED FIRE HYDRANTS ARE REQUIRED TO MET CURRENT DETAIL STANDARDS.

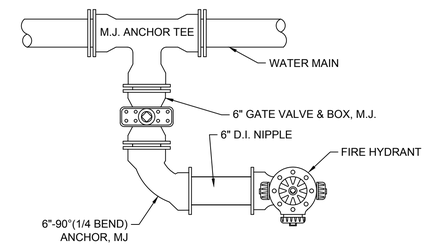

FIRE HYDRANT INSTALLATION
ANGLED APPLICATION
(NOT TO SCALE)

01-AUGUST-2016

CITY OF SCHERTZ TEXAS
ENGINEERING AND PUBLIC WORKS

STANDARD WATER DETAILS

	PROJECT NO.:		DATE:
DRWN. BY: BCP	DSGN. BY: PW	CHKD. BY: KJW	SHEET NO.: 3 of 3

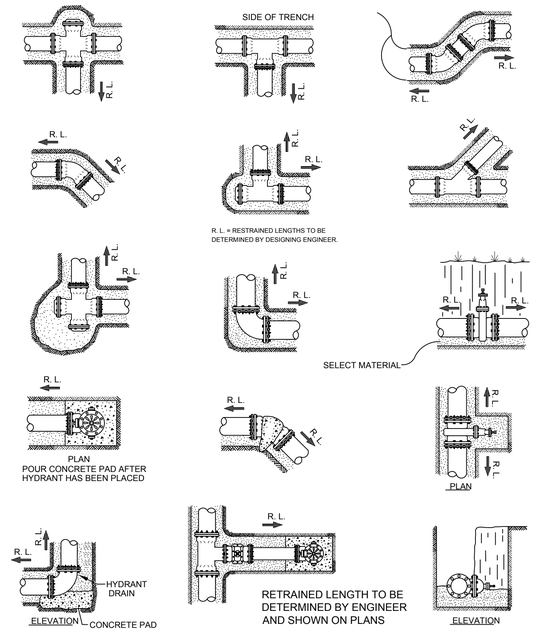

RESTRAINTS FOR FITTING
(NOT TO SCALE)

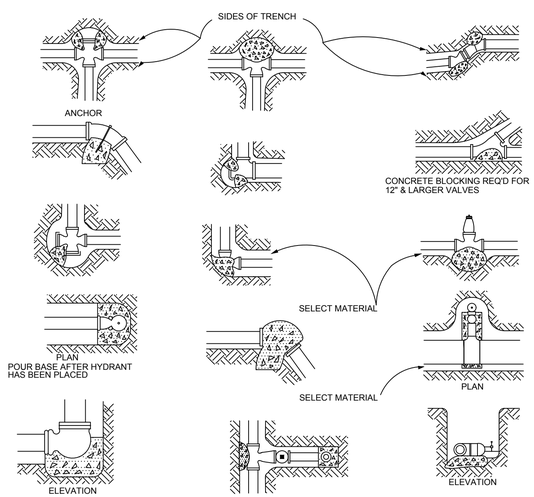

SQUARE FEET OF BLOCKING REQUIRED FOR ROCK EXCAVATION (3000 psi concrete)

SIZE PIPE	TEES & DEAD ENDS	90° BENDS	45° BENDS	22 1/2° BENDS
6"	2	2	1	1
8"	3	4	2	1
12"	6	9	5	2
16"	11	15	8	4
18"	14	20	10	5

SQUARE FEET OF BLOCKING REQUIRED FOR OTHER THAN ROCK EXCAVATION (3000 psi concrete)

SIZE PIPE	TEES & DEAD ENDS	90° BENDS	45° BENDS	22 1/2° BENDS
6"	3	4	2	1
8"	4	6	4	2
12"	10	14	8	4
16"	18	25	14	7
18"	21	31	17	10

THRUST BLOCKING FOR FITTINGS
(NOT TO SCALE)

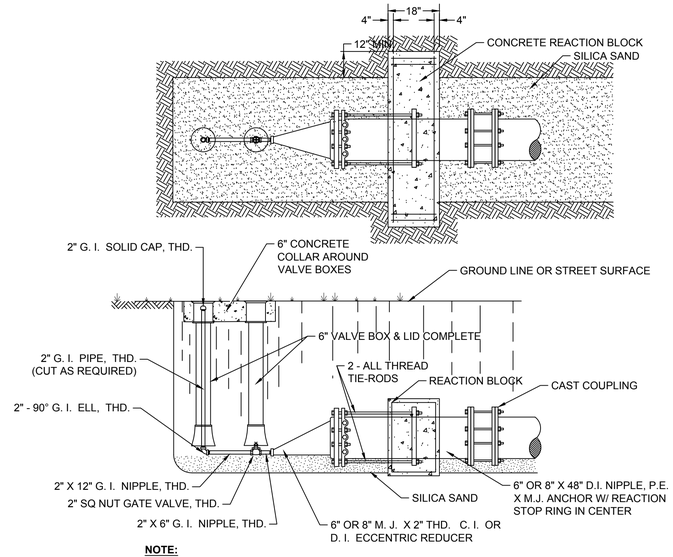

NOTE:

1. EMBED ALL EXTERIOR METAL SURFACES IN SILICA SAND
2. ALL REINFORCE BARS IN THE CONCRETE REACTION BLOCK SHALL BE #4.
3. ALL FERROUS METAL SURFACES TO BE IN ACCORDANCE WITH CITY OF SCHERTZ SPECIFICATIONS.
4. ALL BURIED METAL SURFACES, INCLUDING GALVANIZED PIPE AND STEEL RODS, ARE TO BE PROTECTED FROM SOIL EXPOSURE BY POLYBAGGING AND POLYTAPING.

PERMANENT 2" BLOW-OFF ASSEMBLY ON 6" & 8" MAINS
(NOT TO SCALE)

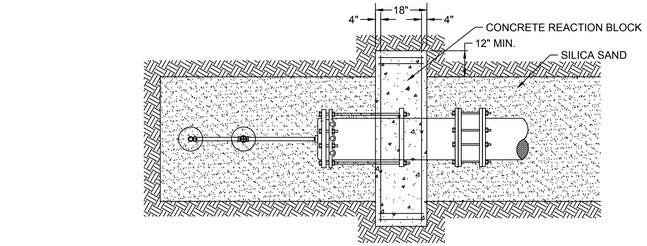

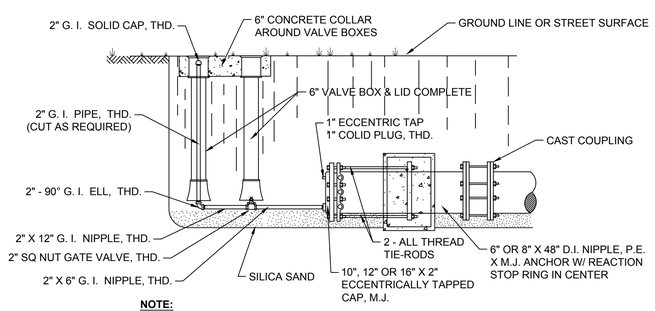

NOTE:

1. EMBED ALL EXTERIOR METAL SURFACES IN SILICA SAND
2. ALL REINFORCE BARS IN THE CONCRETE REACTION BLOCK SHALL BE #4.
3. ALL FERROUS METAL SURFACES TO BE IN ACCORDANCE WITH CITY OF SCHERTZ SPECIFICATIONS.
4. ALL BURIED METAL SURFACES, INCLUDING GALVANIZED PIPE AND STEEL RODS, ARE TO BE PROTECTED FROM SOIL EXPOSURE BY POLYBAGGING AND POLYTAPING (SPEC. 02528).

PERMANENT 2" BLOW-OFF ASSEMBLY ON 10", 12" & 16" MAINS
(NOT TO SCALE)

GENERAL WATER NOTES

1. ALL MATERIALS AND CONSTRUCTION PROCEDURES WITHIN THE SCOPE OF THIS PROJECT SHALL BE APPROVED BY THE CITY OF SCHERTZ AND COMPLY WITH THE FOLLOWING AS APPLICABLE:
   a. CURRENT CITY OF SCHERTZ "UNIFIED DEVELOPMENT CODE"
   b. CURRENT CITY OF SCHERTZ "PUBLIC WORKS SPECIFICATION MANUAL"
   c. CURRENT TXDOT "STANDARD SPECIFICATIONS FOR CONSTRUCTION OF HIGHWAYS, STREETS, AND DRAINAGE."
2. THE CONTRACTOR SHALL NOT PROCEED WITH ANY PIPE INSTALLATION WORK UNTIL THEY HAVE NOTIFIED CITY OF SCHERTZ PUBLIC WORKS WITH AT LEAST 3 WORKING DAYS (72 HOURS) NOTICE. ANY TIE-IN SHALL BE COORDINATED BY THE CONTRACTOR WITH PUBLIC WORKS.
3. THE LOCATIONS AND DEPTHS OF EXISTING UTILITIES, INCLUDING SERVICE LATERALS, AND DRAINAGE STRUCTURES SHOWN ON THE PLANS ARE APPROXIMATE ONLY. THE CONTRACTOR SHALL VERIFY THE EXACT LOCATION AND DEPTHS OF UNDERGROUND UTILITIES AT LEAST 48 HOURS PRIOR TO CONSTRUCTION WHETHER SHOWN ON PLANS OR NOT, AND TO PROTECT THE SAME DURING CONSTRUCTION.
   a. CITY OF SCHERTZ PUBLIC WORKS (210) 619-1800
   b. TEXAS STATE WIDE ONE CALL 1-800-245-4545
   c. CITY PUBLIC SERVICE "
   d. TIME WARNER CABLE "
   e. GUADALUPE VALLEY ELECTRIC CO. "
4. NO METER BOXES TO BE SET IN DRIVEWAYS OR SIDEWALKS. ANY METER BOXES SET IN DRIVEWAYS WILL BE RELOCATED AT THE CONTRACTOR'S AND / OR DEVELOPER'S EXPENSE.
5. 2", SCHEDULE 40, PVC CASING TO BE USED FOR ALL WATER SERVICE LINES BENEATH ROADWAYS.
6. THE CONTRACTOR SHALL BE RESPONSIBLE FOR RESTORING TO ITS ORIGINAL OR BETTER CONDITION FROM DAMAGE DONE TO EXISTING FENCES, CURBS, STREETS, DRIVEWAYS, LANDSCAPING AND STRUCTURES PER SPECIFICATION 01740.
7. THE CONTRACTOR SHALL AVOID CUTTING ROOTS LARGER THAN ONE INCH IN DIAMETER WHEN EXCAVATING NEAR EXISTING TREES. EXCAVATION IN VICINITY OF TREES SHALL PROCEED WITH CAUTION. THE CONTRACTOR SHALL CONTACT THE CITY ARBORIST AND THE CITY OF SCHERTZ CONSTRUCTION INSPECTOR FOR GUIDANCE.

SUPPLEMENTARY

8. NO EXTRA PAYMENT SHALL BE ALLOWED FOR WORK CALLED FOR ON THE PLANS BUT NOT INCLUDED ON THE BID SCHEDULE. THIS INCIDENTAL WORK WILL BE REQUIRED AND SHALL BE INCLUDED UNDER THE PAY ITEM TO WHICH IT RELATES.
9. THE DEVELOPER DEDICATES THE WATERMAINS UPON COMPLETION BY THE DEVELOPER AND ACCEPTANCE BY THE CITY OF SCHERTZ. THE CITY OF SCHERTZ WILL OWN AND MAINTAIN SAID WATER MAINS WHICH ARE LOCATED WITHIN THIS PARTICULAR SUBDIVISION (AS APPLICABLE).
10. THE CONTRACTOR AND/OR THE CONTRACTOR'S INDEPENDENTLY RETAINED EMPLOYEE OR STRUCTURAL DESIGN GEOTECHNICAL/ SAFETY/ EQUIPMENT CONSULTANT, IF ANY, SHALL REVIEW THESE PLANS AND AVAILABLE GEOTECHNICAL INFORMATION AND THE ANTICIPATED INSTALLATION SITE(S) WITHIN THE PROJECT WORK AREA IN ORDER TO IMPLEMENT CONTRACTOR'S TRENCH EXCAVATION SAFETY PROTECTION SYSTEMS, PROGRAMS AND/OR PROCEDURES. THE CONTRACTOR'S IMPLEMENTATION OF THE SYSTEMS, PROGRAMS AND/OR PROCEDURES SHALL PROVIDE FOR ADEQUATE TRENCH EXCAVATION SAFETY PROTECTION THAT COMPLIES WITH AS A MINIMUM, OSHA STANDARDS FOR TRENCH EXCAVATIONS. SPECIFICALLY, CONTRACTOR AND/OR CONTRACTOR'S INDEPENDENTLY RETAINED EMPLOYEE OR SAFETY CONSULTANT SHALL IMPLEMENT A TRENCH SAFETY PROGRAM IN ACCORDANCE WITH OSHA STANDARDS GOVERNING THE PRESENCE AND ACTIVITIES OF INDIVIDUALS WORKING IN AND AROUND TRENCH EXCAVATIONS.
11. WORK COMPLETED BY THE CONTRACTOR WHICH HAS NOT RECEIVED A WORK ORDER OR THE NOTICE TO PROCEED WITH THE CITY OF SCHERTZ CONSTRUCTION INSPECTOR WILL BE SUBJECT TO REMOVAL AND REPLACEMENT BY AND AT THE EXPENSE OF THE CONTRACTOR.
12. THE CONTRACTOR WILL KEEP THE AREA ON TOP OF AND AROUND THE METER BOX FREE OF ALL OBJECTS AND DEBRIS

**NOTE

- CONTRACTORS SHOULD USE **HTH** FOR DISINFECTION OF WATER LINES (NOT CHLORINE INJECTION) UNLESS APPROVED OTHERWISE PRIOR TO ISSUANCE OF PERMIT.
- NEW WATERLINES SHALL BE TIED INTO EXISTING WATER SYSTEM UNDER THE SUPERVISION OF CITY PERSONNEL NO LATER THAN **14 DAYS** AFTER PASSING BACTERIOLOGICAL TESTS.

OSHA TRENCH SAFETY

1. TRENCH EXCAVATION SHALL COMPLY WITH MINIMUM STANDARDS AS SET FORTH BY THE OCCUPATIONAL SAFETY AND HEALTH ADMINISTRATION, REGULATIONS STANDARDS - 29 CFR - "EXCAVATION" - 1926 SUBPART P.
2. TRENCH SAFETY SHALL BE THE RESPONSIBILITY OF THE CONTRACTOR. IT SHALL BE THE CONTRACTOR'S RESPONSIBILITY TO PROVIDE SHOP DRAWINGS FOR DETAIL PLANS AND SPECIFICATIONS TO PROVIDE ADEQUATE SHORING AND SHEETING STANDARDS THAT MEET THE OSHA STANDARDS AS SET OUT BY STANDARDS - 29 CFR - EXCAVATION" - 1926 SUBPART P FOR TRENCH SAFETY.
3. CONTINUOUS INSPECTION OF ALL TRENCH EXCAVATION SHALL BE THE RESPONSIBILITY OF THE CONTRACTOR JOB SUPERINTENDENT. THE CONTRACTOR CONTROLS THE SIZE, WEIGHT, AND SPEED OF OPERATION OF EQUIPMENT AND PIPE INSTALLATION, WHICH DIRECTLY AFFECTS ALL SAFETY MEASURES IN A TRENCH. IF PROBABLE CAUSE OF UNSAFE TRENCH CONDITIONS EXIST, ALL WORK SHALL CEASE IMMEDIATELY UNTIL NECESSARY PRECAUTIONS TO SAFEGUARD EMPLOYEES ARE TAKEN.

01-AUGUST-2016

CITY OF SCHERTZ TEXAS
ENGINEERING AND PUBLIC WORKS

SEAL OF THE CITY OF SCHERTZ INCORPORATED 1958

STANDARD WATER DETAILS

	PROJECT NO.:		DATE:
DRWN. BY: BCP	DSGN. BY: PW	CHKD. BY: KJW	SHEET NO.: 2 of 3

SERVICE	SIZE
SINGLE	3/4"
DUAL	1"

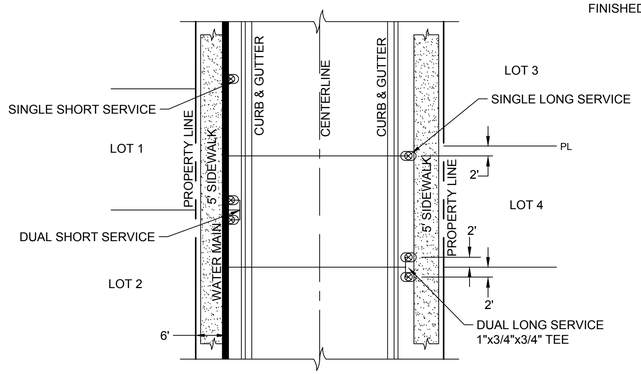

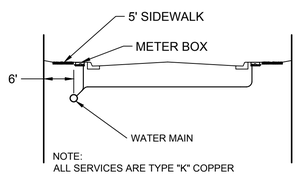

NOTE:
ALL SERVICES ARE TYPE "K" COPPER

METER BOX LOCATION
(NOT TO SCALE)

NOTE
METER BOXES WILL BE ACCOMPANIED BY AN "X"
ETCHED INTO CURB FACE PAINTED BLUE

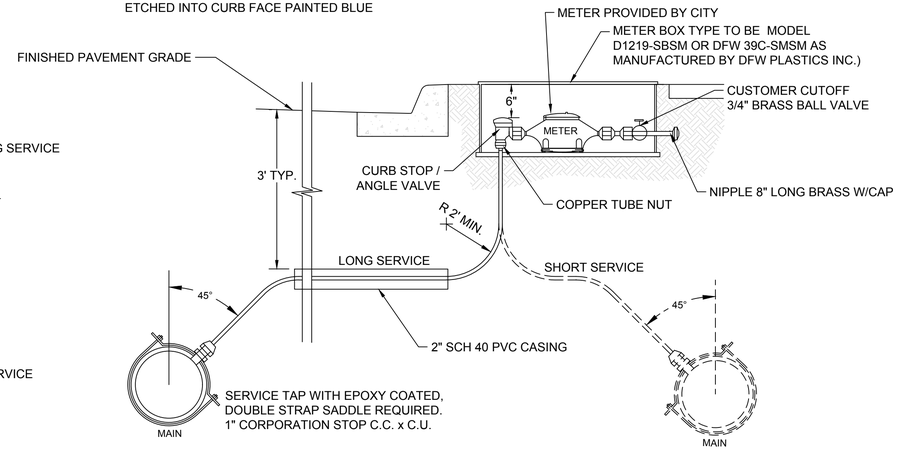

NOTE:
ALL SERVICES ARE TYPE "K" COPPER

WATER TAP AND SERVICE
(NOT TO SCALE)

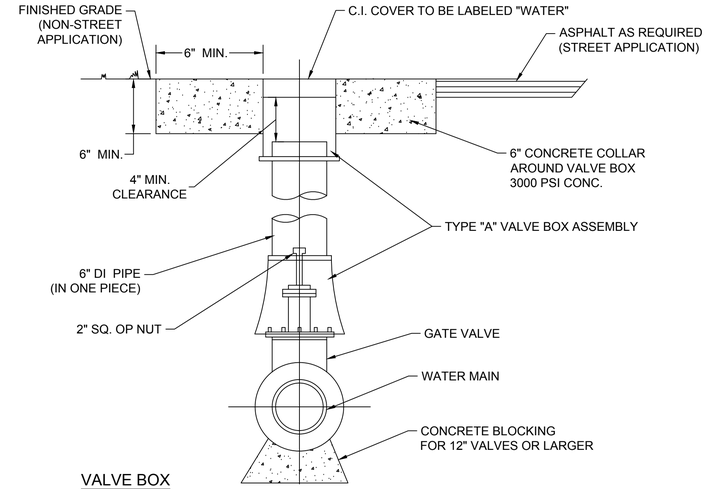

VALVE BOX
(NOT TO SCALE)

NOTE: VALVES WILL BE
ACCOMPANIED BY A "V"
ETCHED INTO CURB FACE
PAINTED BLUE

****NOTE**

- CONTRACTORS SHOULD USE **HTH** FOR DISINFECTION OF WATER LINES (NOT CHLORINE INJECTION) UNLESS APPROVED OTHERWISE PRIOR TO ISSUANCE OF PERMIT.
- NEW WATERLINES SHALL BE TIED INTO EXISTING WATER SYSTEM UNDER THE SUPERVISION OF CITY PERSONNEL NO LATER THAN **14 DAYS** AFTER PASSING BACTERIOLOGICAL TESTS.

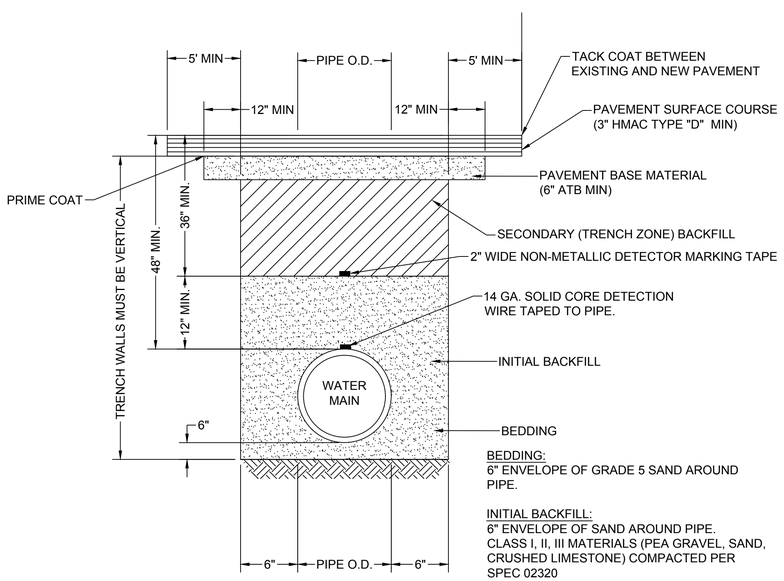

BEDDING:
6" ENVELOPE OF GRADE 5 SAND AROUND PIPE.

INITIAL BACKFILL:
6" ENVELOPE OF SAND AROUND PIPE.
CLASS I, II, III MATERIALS (PEA GRAVEL, SAND, CRUSHED LIMESTONE) COMPACTED PER SPEC 02320

SECONDARY BACKFILL:
FLEXIBLE BASE OR SELECT BACKFILL COMPACTED IN 6" LIFTS TO 95% STD PROCTOR, OR FLOWABLE FILL

PAVED AREA
POTABLE AND RECYLCLED WATER MAIN TRENCH
(NOT TO SCALE)

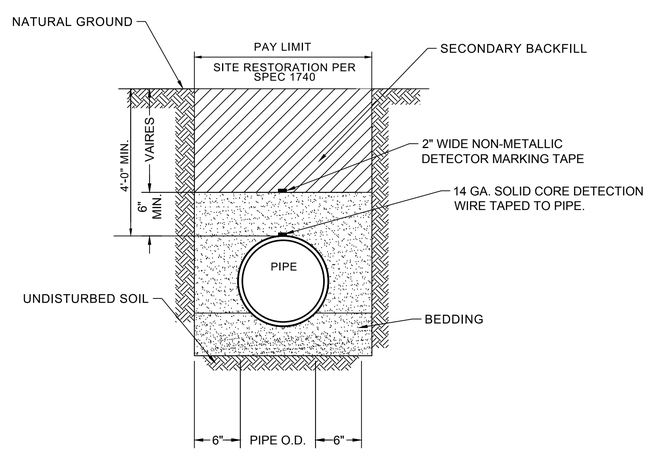

BEDDING:
6" ENVELOPE OF GRADE 5 SAND AROUND PIPE.

6" ENVELOPE OF SAND AROUND PIPE.
CLASS I, II, III MATERIALS (PEA GRAVEL, SAND, CRUSHED LIMESTONE) COMPACTED PER SPEC 02320

SECONDARY BACKFILL:
NATIVE MATERIAL PLACED IN 12" LOOSE LIFTS, FREE OF DEBRIS AND STONES LARGER THAN 6". COMPACTION TO 90% STD PROCTOR

NON-PAVED AREA
POTABLE AND RECYLCLED WATER MAIN TRENCH
(NOT TO SCALE)

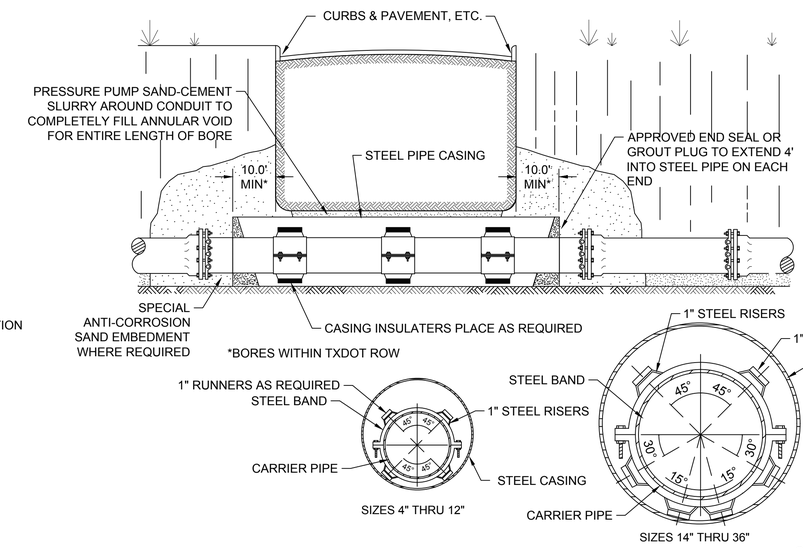

SIZE	BAND WIDTH	NO. RUNNERS PER TIE	
8"	8"	2 TOP,	2 BOTTOM
12"	8"	2 TOP,	2 BOTTOM
16"	12"	2 TOP,	4 BOTTOM
20"	12"	2 TOP,	4 BOTTOM
24"	12"	2 TOP,	4 BOTTOM
30"	12"	2 TOP,	4 BOTTOM
36"	12"	2 TOP,	4 BOTTOM

BORE AND CASE
(NOT TO SCALE)

01-AUGUST-2016

CITY OF SCHERTZ TEXAS
ENGINEERING AND PUBLIC WORKS

SEAL OF THE CITY OF SCHERTZ INCORPORATED 1958

STANDARD WATER DETAILS

	PROJECT NO.:		DATE:
DRWN. BY: BCP	DSGN. BY: DESIGNBY	CHKD. BY: KLW	SHEET NO.: 1 of 3